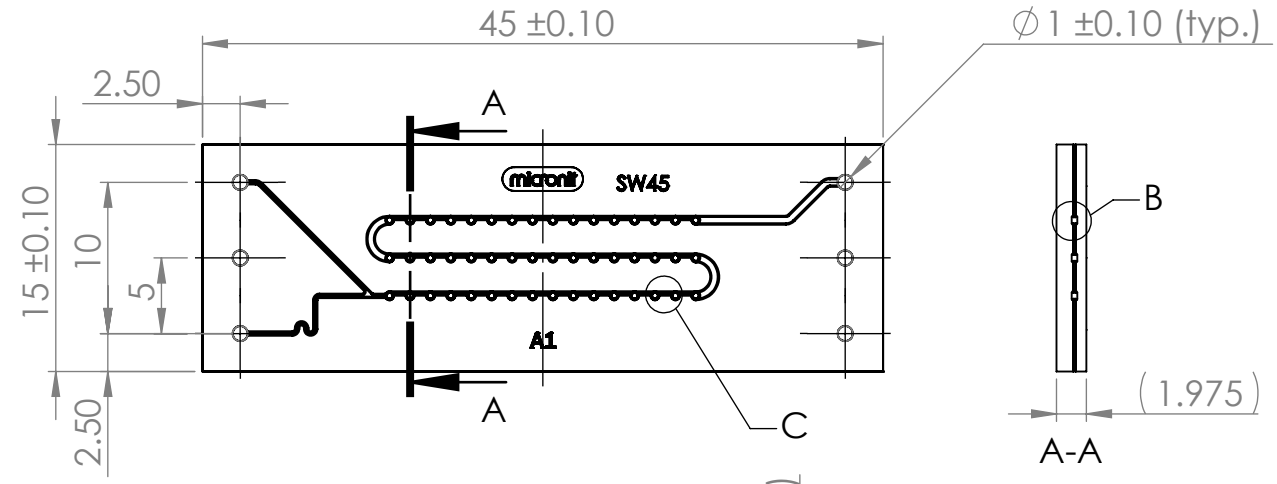

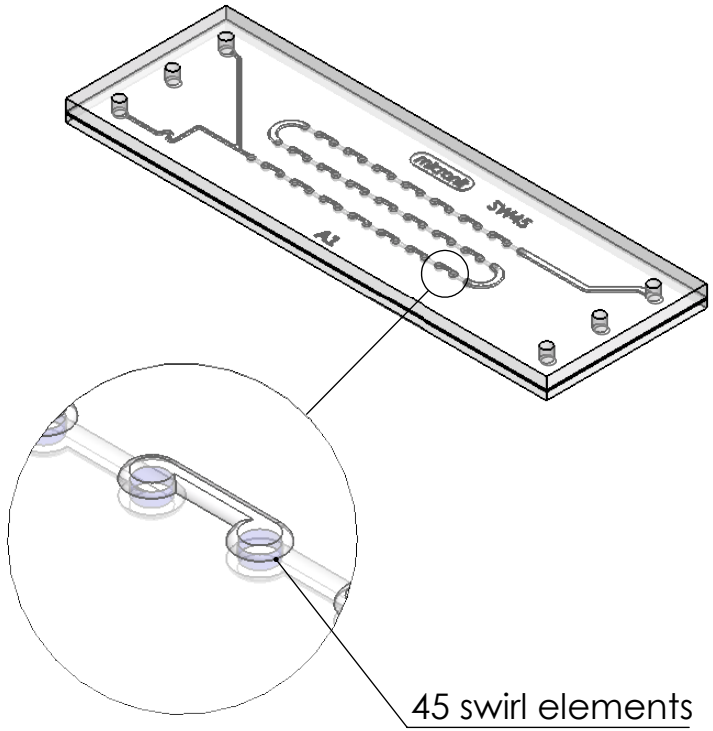

DETAIL D
SCALE 15 : 1

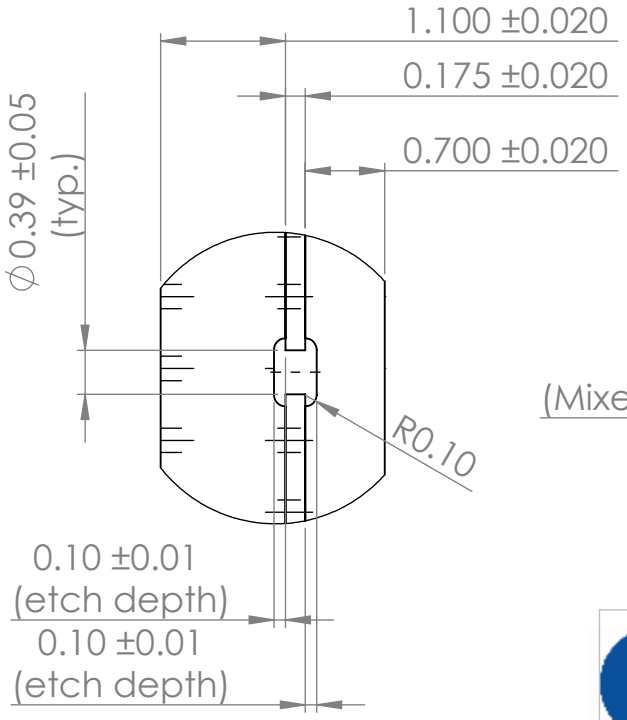

DETAIL B
SCALE 15 : 1

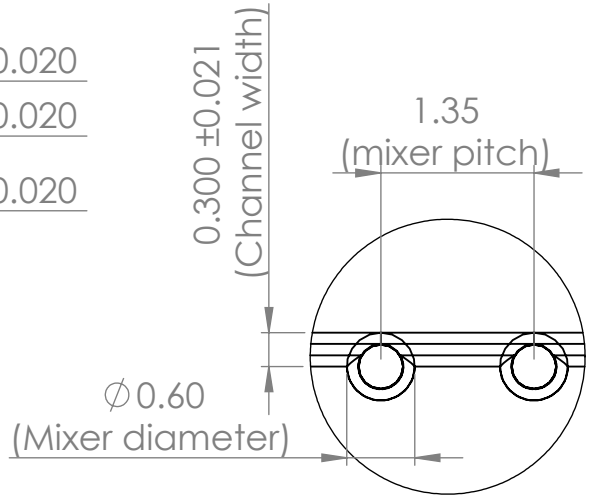

DETAIL C
SCALE 15 : 1

Zone	Rev	REVISION NOTE	Mod By	App By	App Date
	1.0	First Release		WVDC	14 Apr 2025

micronit

ITEM NUMBER: 11008013

DRAWN BY: BVD

DRAWN DATE: 11 Apr 2025

PROJECT NO:

EXT. REF.:

THIRD ANGLE PROJECTION

TITLE: Chip SW45 - etched

MATERIAL: D263T ECO

DWG NO. 42010324

REVISION 1.0

PROPRIETARY AND CONFIDENTIAL

THE INFORMATION CONTAINED IN THIS DRAWING IS THE SOLE PROPERTY OF MICRONIT BV. ANY REPRODUCTION IN PART OR AS A WHOLE WITHOUT THE WRITTEN PERMISSION OF MICRONIT BV IS PROHIBITED.

UNLESS OTHERWISE SPECIFIED:

- DIMENSIONS ARE IN MILLIMETERS
- LINEAR TOLERANCES: ± 0.1
- ANGULAR TOLERANCES: ± 5°

DO NOT SCALE DRAWING

SCALE: 2:1 SHEET FORMAT: A4 SHEET 1 OF 1